DispensGun®

The DispensGun® and components are manufactured by Nordson EFD in the U.S.A.

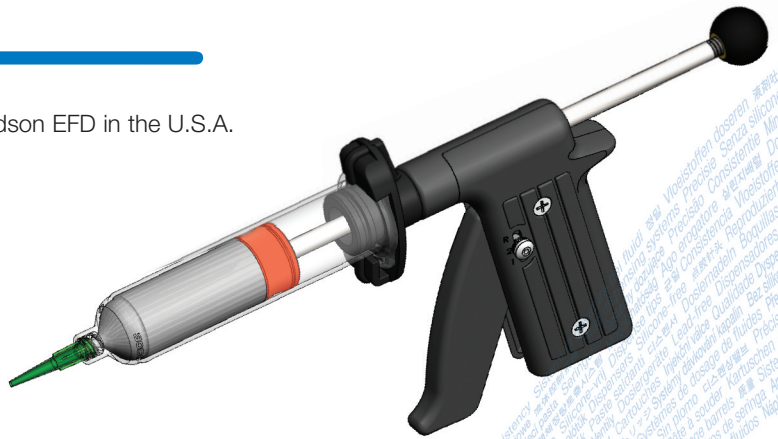

The DispensGun® is easy to use and requires no special techniques.

The amount dispensed is controlled by the squeeze of the trigger and the size of the dispensing tip (larger tip, more flow).

When the trigger is released, the plunger retracts away from the reservoir piston, and dispensing stops.

Follow this step-by-step guide to begin using your new DispensGun.

To order the DispensGun:

3cc	#7023133
5cc	#7023137
10cc	#7023125
30cc	#7023134
55cc	#7023141

™

Nordson EFD

The unique DispensGun simplifies application of medium to high viscosity fluids.

It is very easy to use and less fatiguing than other manual applicators.

Features

- Rugged construction provides years of use.
- Designed specifically for use with the Optimum® System components to eliminate drooling or dripping of fluids.
- Adjustable trigger fits all hand sizes.

Specifications

Handle and Trigger: Metal castings with black epoxy finish

Drive Rod, Selector Button, Hardware: Stainless steel

Barrel Adapter: High-strength acetal polymer

Drive Plunger: Aluminum

Weight (gun only): 311 grams (11 oz)

Safety

Tests demonstrate that the DispensGun is fail-safe. With energetic use of the trigger, in excess of 200 psi (13.8 bar), and a clogged or sealed tip, the barrel ears may break. If this occurs, the barrel merely falls off, with no sudden or dangerous expulsion of either the barrel or fluid.

This manual is for the express and sole use of Nordson EFD DispensGun purchasers and users, and no portion of this manual may be reproduced in any form.

Filling Dispensing Barrels

① Fill barrel, leaving required empty space as shown on Barrel Fill Level chart below.

② Insert piston. A piston must always be used when operating the DispensGun.

③ Put on the blue tip cap and blue end cap to provide an airtight storage seal.

You may be using prepackaged barrels supplied by your distributor. Nordson EFD packages several fluids, including solder mask, thermal heat sink compound, solder paste and grease. Call +1-401-431-7000 for more information on these packaged fluids.

NOTE: Red pistons are recommended for use with the DispensGun.

Warning

If a dispensing tip becomes clogged, do not attempt to clear it by forcing the trigger. This may damage the DispensGun or tip. Replace the clogged tip.

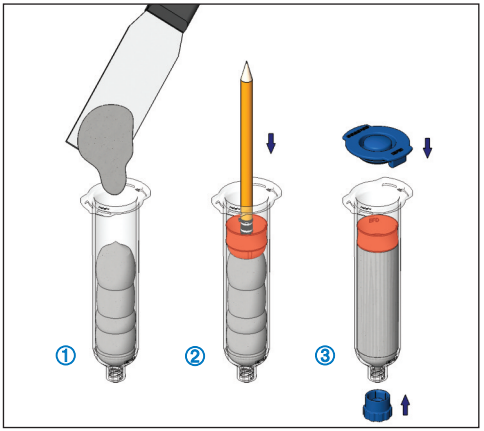

Barrel Fill Level

3cc	1.3 cm	0.5"
5cc	1.9 cm	0.75"
10cc	1.9 cm	0.75"
30cc	1.9 cm	0.75"
55cc	1.9 cm	0.75"

Operating the DispensGun

① Gently squeeze trigger and move selector button to **R**.

② Pull out drive rod as far as it will go.

③ Set hand grip by squeezing trigger and moving selector button to **2** or **1**.

④ Attach barrel to gun. Twist the barrel until it locks. If you turn past the locked position, the barrel will come out.

⑤ Remove tip cap and attach dispensing tip.

⑥ Turn drive rod knob until teeth face down and trigger mechanism is engaged (arrow on back of knob points down). Push drive rod until plunger touches piston.

①

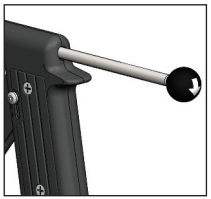
②

③

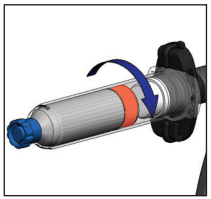
④

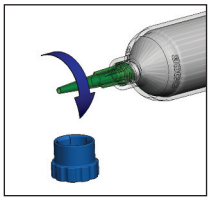
⑤

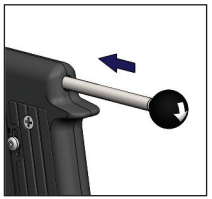
⑥

⑦ You are now ready to dispense. Squeeze the trigger gently until fluid flows. You control the amount. When trigger is released, dispensing stops.

⑧ When finished, remove empty barrel and discard. Barrels that are not empty can be sealed with tip caps for future use.

For best results: Hold the DispensGun with the tip at a 45° angle in contact with the work surface. Use the Test Sheet to practice dots and stripes.

Note: To ensure no-drip performance, the drive rod retracts after each deposit to relieve pressure on the piston. After several deposits, advance the drive rod by pushing the black knob forward, then continue dispensing.

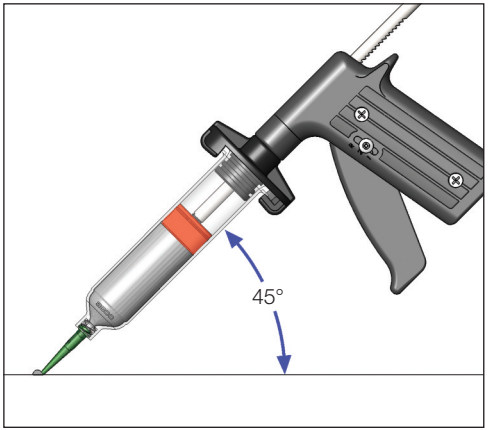

Cleaning the DispensGun

Inspect the drive plunger and wipe clean if necessary. Clean the gun surfaces with household or other mild, nonabrasive cleaners. Do not use solvents.

⑦

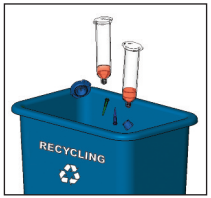

⑧

NOTE: EFD components are recyclable. Check with your local authorities concerning dispense residue.

List of Fluids

silicones
sealants
RTV materials
greases
thick oils
silver, gold, copper pastes
solder paste
particle-filled epoxies
viscous adhesives
organic cements
stop-off fluids
potting compounds
paste flux
brazing pastes
uv-cure pastes

Types of Fluids to Dispense

All viscous, non-leveling fluids are ideal for easy application with the DispensGun.

If you have a problem...

Fluid doesn't flow.	Check to be sure the drive rod knob is pushed forward.
	Check if tip is clogged. Do not attempt to dispense further. Replace with a new tip.
Fluid seeps around the piston.	The tip may be clogged and the squeeze pressure is forcing the fluid past the piston. Replace the tip.
You need more deposit control.	Use a different size dispensing tip. Smaller size for less flow. Larger size for more flow.

Replacement Parts

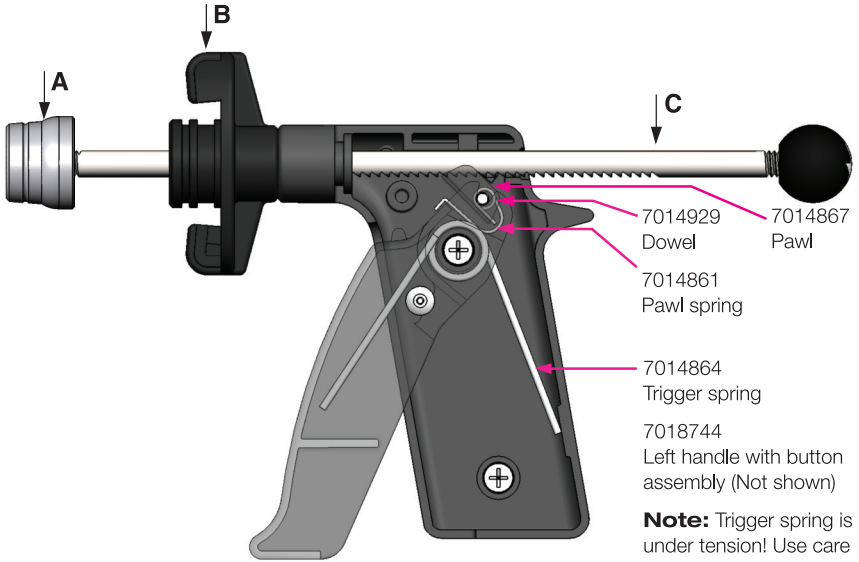

Important: Trigger must be in **R** position during disassembly and assembly.

A Drive Plunger	
size	**part #**
DG3	7015967
DG5	7015966
DG10	7015965
DG30	7015964
DG55	7015964
B Adapter	
size	**part #**
DG3	7018732
DG5	7018729
DG10	7018730
DG30	7018731
DG55	7018731
C Drive Rod & Knob	
size	**part #**
DG3	7029136
DG5	7029137
DG10	7018719
DG30	7018718
DG55	7018755

DispensGun Accessories

Barrels/pistons: Each box contains the same quantity of clear barrels and red pistons.

part #	description
7014103	(50) sets for 3cc size gun
7012098	(40) sets for 5cc size gun
7012116	(30) sets for 10cc size gun
7012138	(20) sets for 30cc size gun
7015450	(15) sets for 55cc size gun

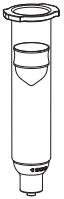

Barrel end caps: Snap-on caps ensure sealing of filled barrels for storage.

part #	size	qty/box
7012190	3cc	(50)
7012192	5cc	(40)
7012194	10cc	(30)
7012196	30cc, 55cc	(20)

Barrel tip caps: Tip caps seal syringe barrels. One size fits all barrels.

part #	qty/box
7012198	(50)

Smooth-flow tapered tips:
Molded polyethylene. (50) tips per box.

tapered	gauge	ID mm	ID inch	color
7018052	14	1.54	.060	olive
7018100	16	1.19	.047	grey
7018158	18	0.84	.033	green
7005009	20	0.61	.023	pink
7018298	22	0.41	.016	blue
7018391	25	0.25	.010	red

Precision stainless steel tips:
Color-coded polypropylene hubs.
12.7 mm (0.50") and 25.4 mm (1.0") free lengths. (50) tips per box.

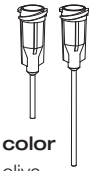

12.7 mm (0.50")	25.4 mm (1.0")	gauge	ID mm	ID inch	color
7018043	7018032	14	1.54	.060	olive
7018068	7018059	15	1.36	.053	amber
7018122	7018110	18	0.84	.033	green
7018178	7018166	20	0.61	.024	pink

DispensGun stand:
Convenient way to hold or store the DispensGun. Made of heavy gauge wire. **part #7023958**

Molded field carrying case
Protects the DispensGun. **part #7023956**

Illuminator™ Rugged flashlight attachment. Batteries included. **part #7023957**

Nordson EFD

PAISLEY

PAISLEY PRODUCTS OF CANADA INCORPORATED
40 Upton Road, Toronto, Ontario
Canada M1L 2B8

Tel: (416) 751 - 3700 Fax: (416) 751 - 3882
E-mail: Info@paisley.ca Web: www.paisley.ca